INTERNATIONAL SUGAR JOURNAL

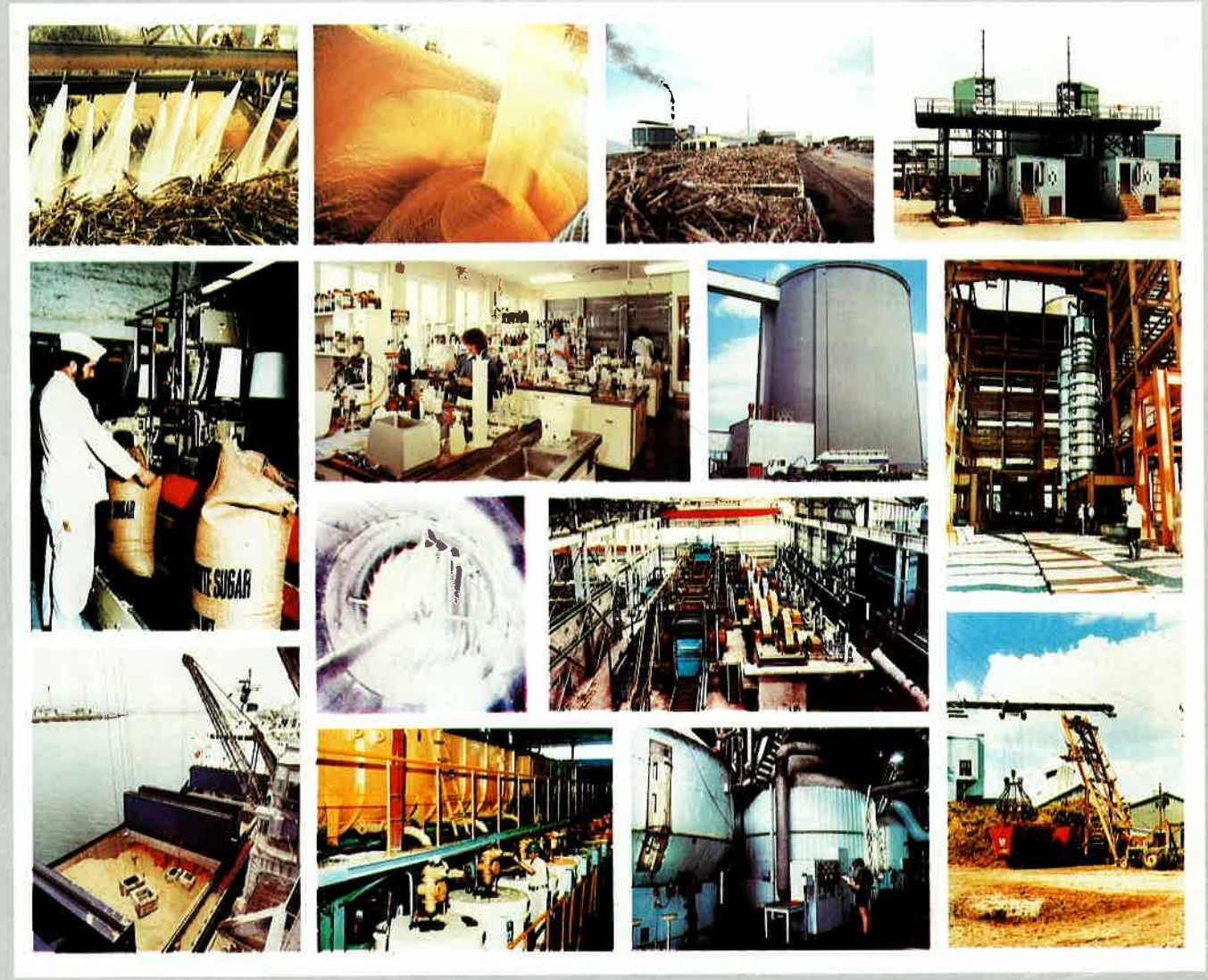

Steam economy and cogeneration in cane sugar factories

By Joan M. Ogden*, Simone Hochgreb* and Michael Hylton**

Introduction

Most cane sugar factories have been designed to be energy self-sufficient, with sugar as the primary product. A bagasse-fired cogeneration system, made up of "medium" pressure boilers (1.5 - 2.0 MPa or 225 - 300 psi) plus small steam driven turbo-alternators, provides all the steam and electricity needed to run the cane mills and factory, leaving little surplus bagasse. With sugar as the main product and bagasse as a "free" fuel, there has been little economic incentive to save bagasse by factory energy efficiency improvements. In fact, bagasse-fired boilers have been designed to be somewhat inefficient, so that excess bagasse does not accumulate and become a disposal problem.

With the recent trend toward diversification in the cane sugar industry, a growing number of factories are manufacturing one or more by-products (such as alcohol or cogenerated electricity for export to the utility grid) in addition to sugar and molasses. In a factory with several products, each of which requires a certain amount of energy (or bagasse) to manufacture, energy efficiency (both in the conversion of bagasse to useful energy and in the utilization of energy within the factory) can become much more important.

In this paper, we discuss some implications of energy efficiency improvement for a raw sugar factory with a cogeneration system. We have considered two types of bagasse-fired cogeneration systems, which potentially offer much higher electricity production than those found in most sugar factories today: (1) high pressure condensing-extraction steam turbine systems, and (2) steam-injected gas turbines run on gasified bagasse.

In this paper "high pressure" (4.0 - 8.0 MPa) refers to boiler pressures typical of condensing-extraction steam turbines. "Medium pressure" refers to steam used for cane mills, which equals the boiler pressure in most sugar factories today (1.5 - 2.0 MPa). "Low pressure" refers to mill and turbo-alternator exhaust steam used in the process (0.2 - 0.3 MPa).

High pressure or condensing-extraction steam turbine (CEST) cogeneration systems are now used in a few cane sugar factories[1,2] and are being considered for several others[3]. As has been demonstrated in Hawaii and Réunion, when small medium pressure turbo-alternators are replaced with a high pressure CEST system, the total electricity production can be increased from about 20 kWh/tc (just enough to run the factory) to perhaps 70 - 120 kWh/tc. Thus, in addition to making sugar, about 50 - 100 kWh/tc becomes available for export to the utility grid. With a CEST cogeneration system, there would be an incentive to improve factory steam economy: any fuel (or equivalent steam) saved in the sugar process would become available for generating additional export electricity[2].

In a gasifier/steam injected gas turbine (GSTIG) system, bagasse would be gasified to form a low BTU gas, which fuels a gas turbine[4-6]. Steam would be raised for the mills and the process in a heat recovery steam generator (HRSG), which utilizes the hot exhaust gases leaving the turbine. Any steam not needed for the factory could be injected into the combustor to boost the electrical output of the system. As with the CEST system, the lower the factory steam demand, the higher the electrical output. While GSTIG systems are not commercially available at present, they could be developed within the next several years. Similar systems are being developed for use with coal in the US[7]. Linked with this development, biomass-fired systems could be commercialized within about three years[8]. GSTIG systems are of interest because they could potentially produce up to 200 kWh/tc of export electricity, about twice as much as high pressure steam turbine systems[5,6]. However, GSTIG systems could not provide quite enough process steam to supply the average cane sugar factory. Thus, some factory steam economy measures would be desirable when using these systems.

Our motivations for studying factory steam economy in raw cane sugar factories with cogeneration are twofold: to boost the export electricity production from a particular type of cogeneration system, and to widen future cogeneration options for the cane sugar industry to include the more efficient GSTIG systems. With these goals in mind, we have assessed several steam-conserving retrofits incorporating commercially available process equipment: waste heat recovery heat exchangers which utilize hot condensate for juice heating, falling film evaporators, and continuous vacuum pans. In the 1970's, these technologies were widely adopted in oil-dependent process industries with large evaporation energy requirements (such as the beet sugar, pulp and paper, and dairy industries) to reduce fuel costs[9]. With the emphasis on by-products and process steam economy, they are beginning to appear in the cane sugar industry as well[10,11].

Although we have focused on cogeneration, the energy efficiency improvements discussed may also be of interest to factories with other by-products which require energy (or bagasse) for their manufacture.

Increased cogeneration output through improved factory steam economy

(A) Electricity and steam production in

* Center for Energy and Environmental Studies, Princeton University, Princeton, NJ 08544, USA

** Sugar Industry Research Institute, Factory Technology Division, Kingston, Jamaica.

1 Kinoshita: *Private communication*, 1987.
2 "24.65 MW bagasse-fired steam power plant demonstration project", *Commission of European Communities Report* EUR 10390 EN/FR, (1986).
3 Ronco Consulting Corporation and Bechtel National Inc.: "Jamaica Cane/Energy Project Feasibility Study" (US Agency for International Development, Washington, DC, USA), 1986.
4 Larson & Williams: *Amer. Soc. Mech. Engineers Report*, 1986, (86-GT-47), 9 pp.
5 Larson *et al.: I.S.J.*, in press.
6 Idem: *Princeton University Center for Energy and Environmental Studies Report*, 1987, (217), 103, pp.
7 Corman: "System analysis of simplified IGCG plants". (General Electric Company, Schenectady, NY, USA), 1986.
8 Idem: *Paper presented at workshop on biomass-gasifier steam injected gas turbines for the cane sugar industry*, (Arlington, VA, USA), 1987.
9 Rosenblad: *Private communication*, 1986.
10 Töbe: *Sugar y Azúcar*, 1987, **82**, (4), 36 - 40.
11 Bourzutschky: Private communication, 1987.

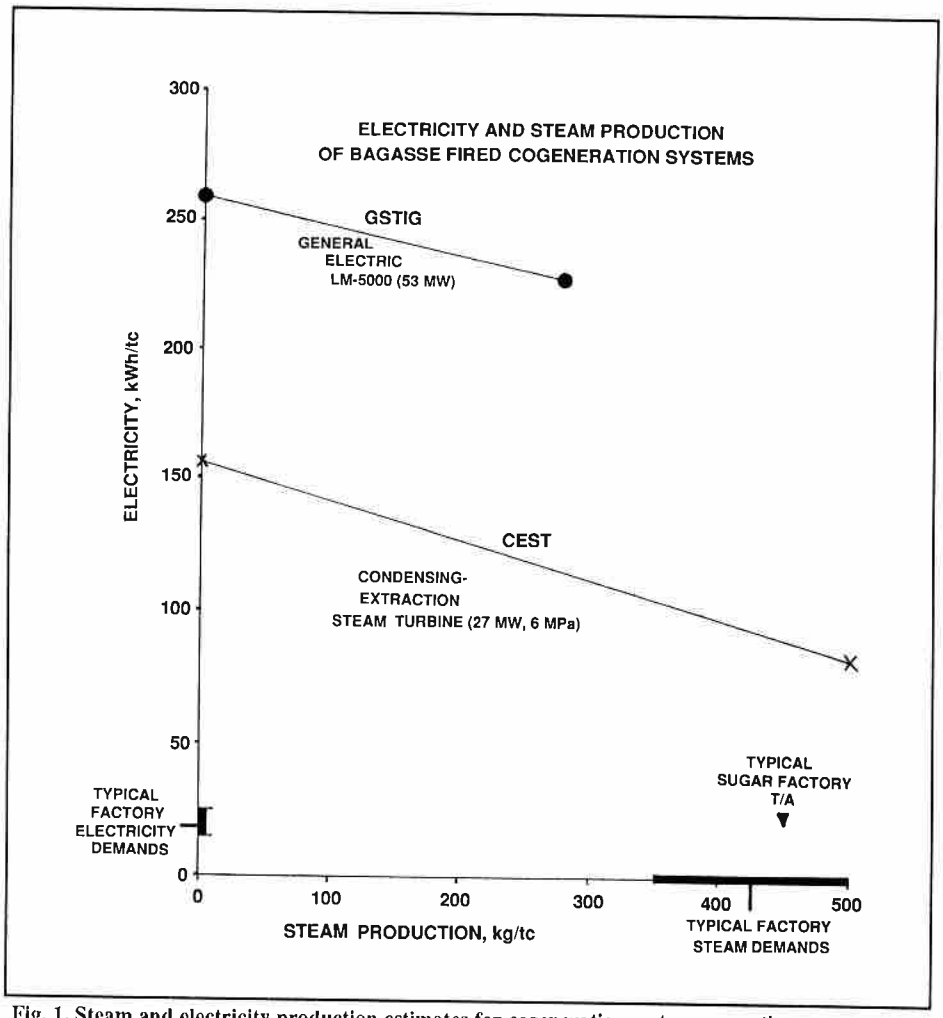

Fig. 1. Steam and electricity production estimates for cogeneration systems operating at cane sugar factories during the milling season with bagasse as fuel[5]

cogeneration systems: The electricity (in kWh/tc) and steam production (in kg of medium pressure steam produced per tonne of cane) are shown in Figure 1 for a high pressure condensing-extraction steam turbine (CEST) cogeneration system and for three gasifier/steam injected gas turbine (GSTIG) systems of various sizes[5,6]. Steam and electricity demands characteristic of most raw cane sugar factories today[12] are shown as ranges of values along the x and y axes of the graph. We have also plotted the steam and electricity production in a typical medium-pressure steam-driven turbo-alternator (MPTA) sugar factory cogeneration system.

For both CEST and GSTIG cogeneration systems, the steam and electricity production can be varied over a range of operating conditions, so that more electricity can be produced when the steam demand is lower. The right endpoint of each range indicates the maximum amount of process steam which could be produced with the particular cogeneration system; the left endpoint represents the maximum electricity production, which would occur when the process steam production is zero. In Figure 1, we have calculated the steam and electricity production at each endpoint and assumed that the electricity production increases linearly with decreasing steam demand[6,12].

Comparing typical factory demands with the output of the cogeneration systems, we see that the CEST can easily meet the steam demands of the average raw sugar factory (350 - 500 kg/tc), while producing about 100 kWh/tc, roughly five times as much electricity as a small turbo-alternator system in a typical factory. While the GSTIG produces about 200 kWh/tc or twice as much electricity as the CEST system, the maximum steam production possible with the GSTIG systems is only about 270 - 300 kg/tc. The GSTIG system would not be able to supply all the process steam needs without some factory steam economy measures.

(B) Integrating a cogeneration system with a cane sugar factory: Examples of how a raw sugar factory could be integrated with a cogeneration system are shown in Figure 2 for three cases: a conventional factory with small medium pressure back-pressure and condensing turbo-alternators; a conventional factory with a CEST system; and a hypothetical steam conserving factory with a GSTIG system.

Electricity and steam supply and demand in a conventional raw sugar factory are illustrated in Figure 2a. In most raw cane sugar factories, steam is raised at 1.5 - 2.0 MPa in a medium pressure boiler. About 200 - 250 kg/tc of medium pressure steam is used to drive small back-pressure mill turbines; an additional 150 - 250 kg/tc goes to run one or more small back-pressure or condensing turbo-alternators, which produce just enough electricity for the factory (about 15 - 25 kWh/tc) , but none for export. The 350 - 500 kg/tc of low pressure exhaust steam (saturated steam at 0.2 - 0.3 MPa) from the mill turbines and turbo-alternators is then utilized for process heat (e.g. juice heating, evaporation and crystallization of sugar).

Variants of a CEST system with a conventional sugar factory are shown in Figures 2b and 2c. In a CEST cogeneration system, steam is raised in a high pressure boiler at 4.0 - 8.0 MPa, and passes through a condensing extraction steam turbine. About 200 - 250 kg/tc of medium pressure steam is extracted

12 Hugot: "Handbook of cane sugar engineering" (Elsevier, Amsterdam) 1986, 1166 pp.

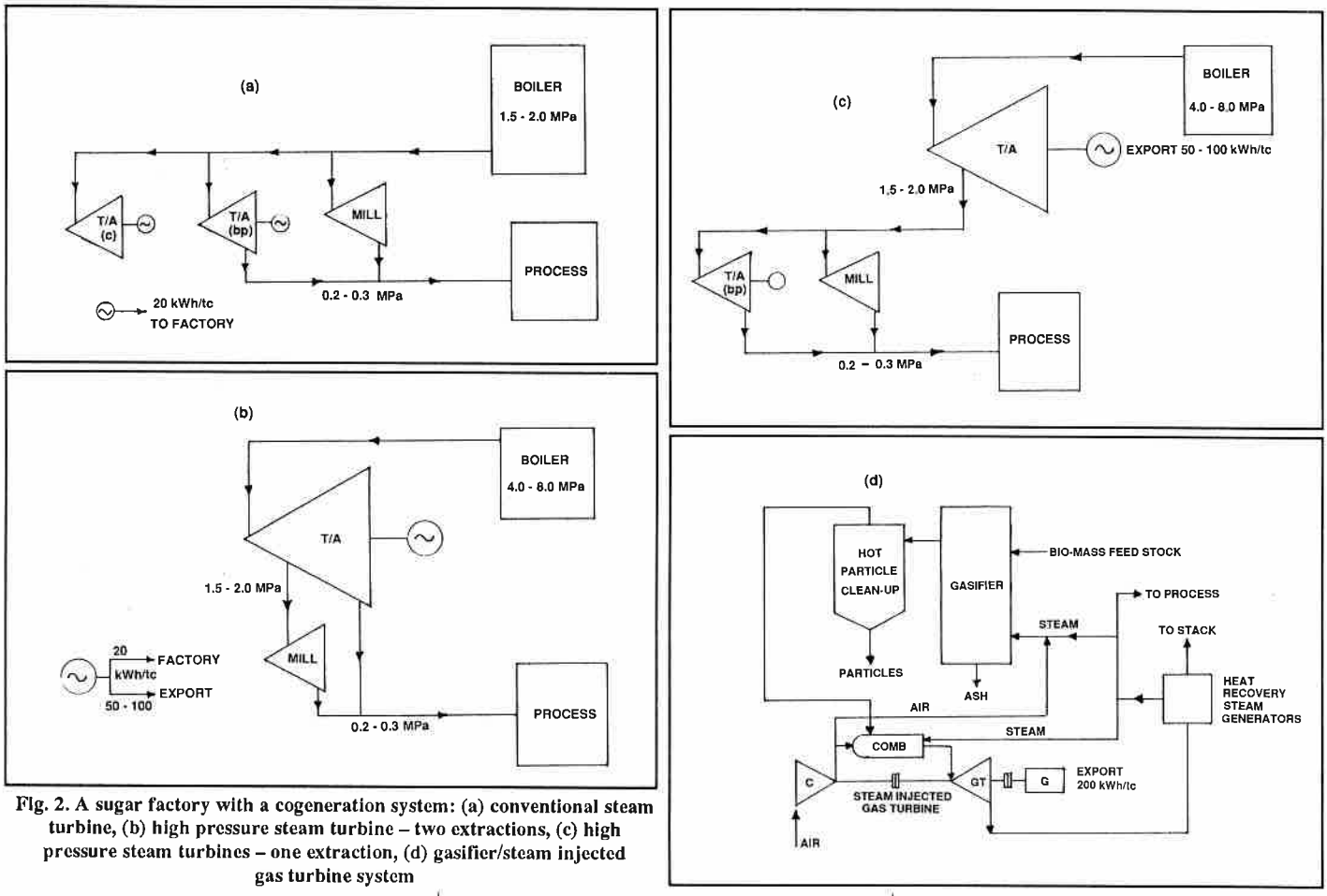

Fig. 2. A sugar factory with a cogeneration system: (a) conventional steam turbine, (b) high pressure steam turbine – two extractions, (c) high pressure steam turbines – one extraction, (d) gasifier/steam injected gas turbine system

from the turbine at 1.5 - 2.0 MPa for use in the mill turbines. The additional low pressure steam needed for process (150 - 250 kg/tc) can be supplied directly from the large steam turbine via a second extraction at 0.2 - 0.3 MPa (Figure 2b). The turbine supplies electricity to both the factory and for export. Alternatively, in the case of a retrofit, enough medium pressure steam can be extracted to run the mills plus the existing back-pressure turbo-alternators, which then provide exhaust steam for process as before and some of the factory electricity (Figure 2c). With either scheme, the export electricity production is about the same, perhaps 50 - 100 kWh/tc.

An example of how a GSTIG cogeneration system could be integrated with a sugar factory is sketched in Figure 2d. We have assumed that the factory process steam demand has somehow been reduced to less than 270 - 300 kg/tc. In the case shown, all the steam raised in the heat recovery steam generator (HRSG) is at medium pressure, and the existing back-pressure turbo-alternators may be used to generate a small amount of electricity for the factory. The export electricity would be about 200 kWh/tc.

(C) Export electricity production as a function of process steam demand in a raw cane sugar factory: Subtracting the factory electricity demand from the total electricity production (including both CEST or GSTIG and any electricity generated in the existing turbo-alternators), the electricity available for export to the grid can be calculated as a function of process steam demand.

Let us take as an example our base case, which is modelled on the Monymusk factory in Clarendon, Jamaica. The steam and electricity demands assumed for this factory are listed by end-use in Table I[13]. The first column gives electrical demands based on the existing factory, which uses small medium pressure steam turbo-alternators. The second column assumes that the old medium pressure boilers have been replaced by a new CEST cogeneration system (as in Figure 2c), thereby reducing the factory electricity demands from 19.4 kWh/tc to 12.9 kWh/tc. This assumption is based on preliminary measurements at Bernard Lodge factory in Jamaica[14], which suggest that the factory electricity demand can be cut by perhaps one-third, if the fans and pumps from the old boiler are replaced by a new CEST or GSTIG system. Of course, the CEST or GSTIG systems will also have fans or pumps, but this electricity use has already been included in the overall production curve in Figure 1.

13 Blanchard: Private communication.
14 Baldwin & Finlay: *Paper presented to Jamaican Assoc. Sugar Tech.*, 1987, in press.

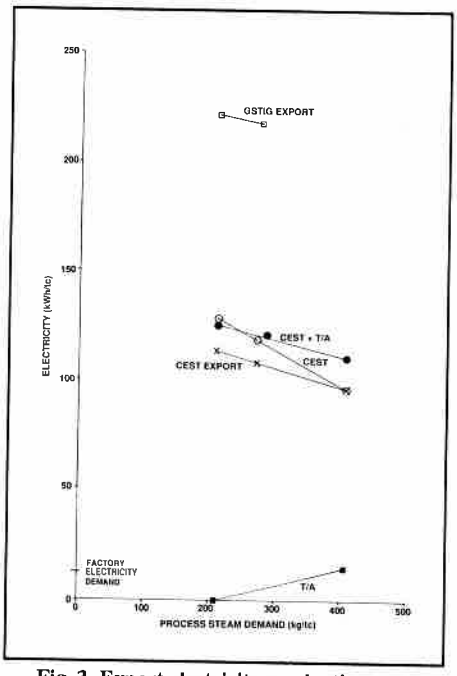

Fig. 3. Export electricity production as a function of process steam demand

If we could reduce the low pressure steam demand in the evaporators, vacuum pans and juice heaters, less exhaust steam would be needed. Thus, the amount of medium pressure steam extracted from the CEST would be reduced and the electrical production of the CEST system would increase by about 0.146 kWh per kilogram of steam saved, as shown in Figure 1.

If the low pressure steam demand exceeds the amount of exhaust available from the mill, some medium pressure steam would be sent through the existing back-pressure turbo-alternators. As the low pressure steam demand decreased, the electricity contributed by the turbo-alternators would also decrease. Thus, the total electricity production would increase more slowly than that in the CEST alone. The electricity production in the turbo-alternators is assumed to be about 0.07 kWh/kg medium pressure steam (see Appendix 1). If the low pressure steam demand could be reduced so that it just equalled the mill exhaust, the electricity production from turbo-alternators would be zero. Subtracting the factory electricity demand from the total, the export electricity can be found as a function of process steam demand (Figure 3). For our base case, for each kilogram of process steam saved, about 0.076 kWh of extra export electricity is produced.

For a high pressure steam turbine cogeneration system, the potential exists to boost in-season export electricity production significantly by factory steam economy. For example, if the process steam demand were reduced from 500 to 400 kg/tc, an extra 10.5 kWh/tc of electricity could be exported to the utility grid. For a factory crushing 175 tonnes of cane per hour (tch), this would mean an extra 1.84 MW of exportable electric power in the season, more than a 10% increase. If the season is 210 days long, and the factory runs 23 hours per day, the revenue over one season is about US $500,000, assuming that the electricity is worth $0.06/kWh.

Moreover, decreasing the factory low pressure process steam demand below 270 - 300 kg/tc means that the more electrically efficient gasifier/gas turbine cogeneration systems could potentially be used, and still meet factory process steam demands. Sugar factory steam economy widens the choice of future cogeneration systems to include those with very high electrical efficiency.

Opportunities for conserving factory steam

From Table I, we see that the evaporators, juice heaters and vacuum pans are the largest users of low pressure process steam. In this section we describe commercially available process equipment which could save energy at each of these steps.

Juice heaters: Present practice is to use shell-and-tube juice heaters heated with bled vapour from the evaporator (Figure 4a). In most factories, raw juice is heated in several stages with vapour bled from the evaporators (or sometimes with low pressure exhaust steam). Shell-and-tube heat exchangers are used, with the bled vapour condens

Table I. Process steam and electricity uses in the Monymusk sugar factory*

	Existing factory†	With external CEST cogeneration system
Medium pressure steam (1.37 MPa, 250°C)		
Total m.p. steam used	477 kg/tc	420 kg/tc
Cane mills	209 kg/tc	209 kg/tc
Medium pressure steam turbines		
Back-pressure	211 kg/tc	211 kg/tc
Condensing	57 kg/tc	-
6% Losses in mills and turbines	29 kg/tc	25 kg/tc
Total l.p. exhaust available	401 kg/tc	395 kg/tc
Low pressure steam (Mill and turbine exhaust, 0.2 MPa, 120°C, saturated)		
Total l.p. steam used	392 kg/tc	392 kg/tc
Evaporator		
Total	337 kg/tc	337 kg/tc
Bled to vacuum pans	98 kg/tc	98 kg/tc
Bled to juice heaters	90 kg/tc	90 kg/tc
Direct to vacuum pans	43 kg/tc	43 kg/tc
3% l.p. steam losses	12 kg/tc	12 kg/tc
Electricity demand		
Total electricity demand	19.4 kWh/tc	12.9 kWh/tc
Electricity production		
Medium pressure steam turbines	19.4 kWh/tc	14.8 kWh/tc

* Source: based on simulation by John D. Blanchard, Clarendon Sugar Holdings, Monymusk, of the Monymusk factory operating at a crushing rate of 175 tonnes of cane per hour

† Steam driven mills; Robert type 4-effect evaporator; medium pressure back-pressure and condensing turbo-alternators; and discontinuous vacuum pans

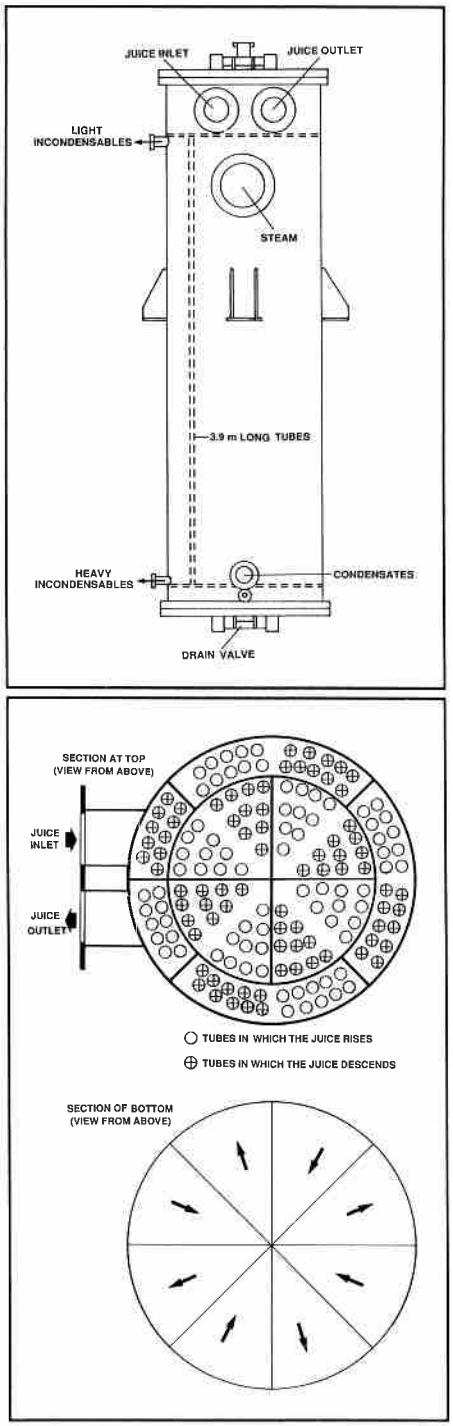

Fig. 4. Juice heaters: (above) shell-and-tube juice heaters, (below) plate-and-gasket juice heaters[12]

ing on the hot side and juice heated on the cold side. Clarified juice heaters also typically use vapour bled from the evaporator.

Other options include using hot condensate from the evaporator and vacuum pans for juice heating. By using the plentiful hot condensate from the evaporator and vacuum pans (which has an average temperature around 100°C) a large part of the juice heating could be done and some steam could be saved. In many cane sugar factories, the pure portion of the condensate (i.e. that derived from condensed exhaust steam) is returned to the boiler as feed water. In these factories, it may or may not be more efficient to send the pure condensates directly to the boiler, rather than using them first to heat juice.

This trade-off involves a number of factors, which depend on the factory design. For example, consider two options: (1) pure condensate is sent directly to the boiler at 90°C; (2) pure condensate is used first for juice heating and then sent to the boiler at 40°C. If the boiler produces steam at 6.0 MPa and 480°C, the total enthalpy change is (3373 – 167) = 3206 kJ/kg for 40°C feed water, and (3373 – 377) = 2996 kJ/kg for 90°C feed water. The energy required to make steam is about 7% higher with 40°C feed water than with 90°C feed water. Depending on how much of the 7% energy difference must be provided by burning extra bagasse (some feed water preheating may be done with boiler flue gases in an economizer stage), and how much process steam would be saved, using the pure condensates for juice heating en route to the boiler may or may not result in less fuel consumption overall.

The heat contained in the impure condensates (those derived from juice vapours, i.e. from 2nd and later evaporator effects) is generally not recovered in sugar factories today. Depending on the evaporator and vacuum pan operating temperatures, the impure condensates could contain as much or more heat than the pure condensates, and could accomplish at least some and possibly all of the juice heating. If desired, it would be possible to utilize the pure condensates as for the boiler, and the impure condensates for juice heating.

In a falling film evaporator, the exhaust steam consumption (and therefore the pure condensate production) would be lower than in a Robert evaporator. Less boiler feed water would be needed, and the impure condensates would be hotter and more plentiful than in a Robert evaporator. Thus, more energy would be available from impure condensates for juice heating.

Either plate-and-gasket or shell-and-tube type heat exchangers could be used for juice heating with hot condensate. Plate-and-gasket heat exchangers (Figure 4b) have higher heat transfer coefficients than shell-and-tube heat exchangers (see Appendix 2). As the heat exchanger areas would be reduced, they are likely to be more compact and less expensive. The pressure drop would be similar to that of the shell-and-tube type heat exchangers.

In a plate-and-gasket heat exchanger, it is important to remove any large particles from the juice which could clog the narrow space between the plates. Experience in the beet sugar industry indicates that it should be possible to screen potentially troublesome coarse particles[11]. Another possible application for plate-and-gasket heat exchangers is for heating clarified juice.

Evaporators: In most cane sugar factories at present, forward-feed, multiple-effect, short-tube rising film (or Robert) evaporators are used (Figure 5a). Vapour is bled from the first two effects for juice heaters and vacuum pans. The first one or two effects run at slightly above atmospheric pressure, with the later stages running at less than atmospheric. Vapour from the final stage of the evaporator is fed into a barometric condenser to maintain a pressure gradient throughout the system. The heat transfer coefficients vary with the Brix as shown in Figure 5c.

Falling film evaporators (Figure 5b) are often used as energy savers in the beet sugar, pulp and paper and dairy industries, and are being studied for use in the cane sugar industry[10,11]. They have the advantage of higher juice flow velocity and higher heat transfer coefficients (Figure 5c) and can therefore run at

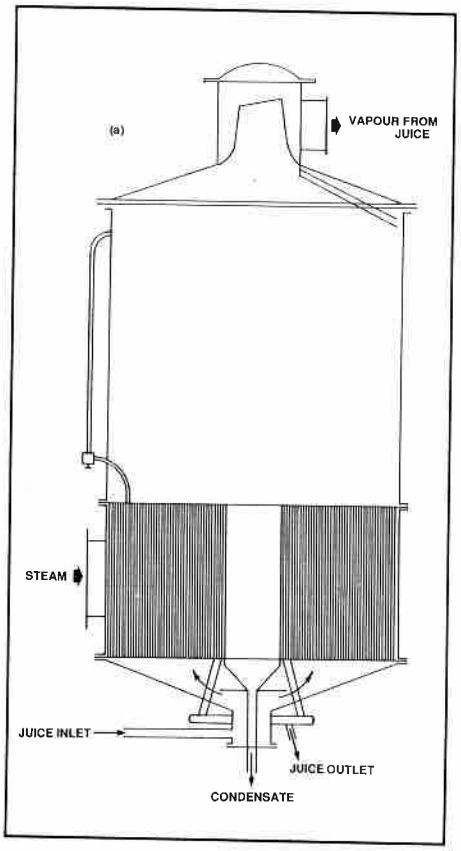

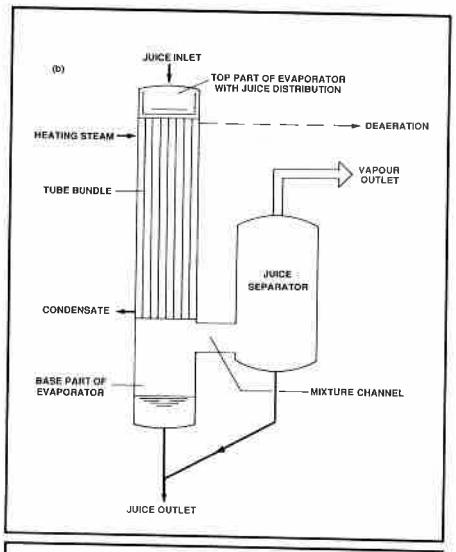

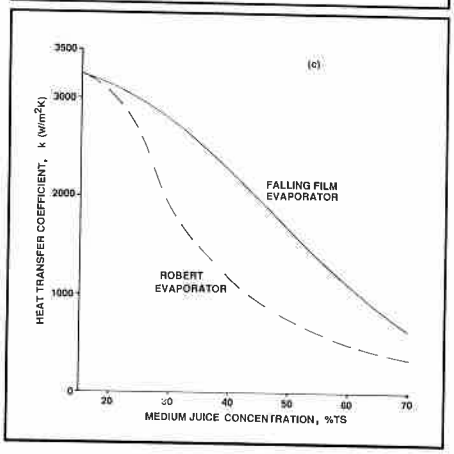

Fig. 5. Evaporators: (a) present practice – short-tube rising film (Robert) evaporator, (b) another option – falling film evaporator, (c) heat transfer coefficients of Robert and falling film evaporators *vs.* Brix[10,12]

a smaller temperature difference between effects.

With an input steam temperature of 135°C, it is possible to run the entire evaporator at pressures above atmospheric and utilize the vapour from the later effects for juice heating and vacuum pans. Vapour bleeding from later effects rather than from the first effect makes better use of the multi-effect configuration and reduces the overall steam consumption of the evaporator. Moreover, the condensate from the effects is quite hot (100 - 125°C) and in many cases could do all the juice heating. In existing factories with steam driven mills, the mill exhaust back pressure is already set and it may not be possible to produce exhaust steam at 135°C. However, even with exhaust steam at 120°C, it should be possible to run three or even four effects of a falling film evaporator under pressure.

Because the juice travels through a falling film evaporator three to four times as quickly as in a Robert type, it is likely that higher input steam temperatures (up to 130 - 135°C) could be tolerated without damage to the juice by inversion of sugars and colour formation. The issue of colour formation during evaporation is still a topic of research[15]. However, results from the falling film evaporator operated at the Sugar Industry Research Institute in Jamaica indicate no problems with colour formation at these temperatures.

Vacuum pans: In discontinuous pans, the thick syrup or massecuite is boiled down one batch at a time, in several stages or strikes. Because of the water added in washing, molasses dilution and agitation, it takes about 1.2 - 1.7 kg of steam to evaporate 1 kg of vapour from the massecuite in each pan. Steam consumption values reported in the literature[12] range from 120 to 170 kg/tc, depending on the design of the vacuum pan.

The steam load varies greatly in individual discontinuous pans. When the syrup is introduced into the pan, evaporation proceeds very quickly and the steam demand is high. Then the steam demand of the pans drops, owing to the increased massecuite Brix. This variation is a disadvantage with cogeneration where constant steam loads are desirable.

Continuous vacuum pans have the advantage of lower steam consumption and constant steam loads, and are coming into increasing use[12]. Agitation can be done with the incondensable gases vented from the pan, or with a little extra steam. Hugot[12] estimates that the steam consumption for a continuous pan should be about 25% less than for a discontinuous pan.

Steam economy case studies – factory balances and preliminary economics

Simplified model of the cane sugar factory

To study the effect of steam economy retrofits, we have used a simplified model of the cane sugar factory. The equations and assumed values used in our calculations are given in detail in Appendices 1-4. We have summarized the main features below:

(1) *Steam consumption in steam driven cane mill turbines and back-pressure turbo-alternators*

We have used steam consumption numbers for the mills and back-pressure turbo-alternators based on detailed calculations by engineers at Monymusk[13].

These values are tabulated in Appendix 1. As a check, we have also computed the expected steam consumption, as a function of steam inlet and outlet conditions, based on simplified formulae from Hugot[12]. As suggested by Hugot, we have assumed steam losses at 6% in the mills and back-pressure turbo-alternators.

15 Sangster: Private communication, 1987.

(2) *Juice heater calculations*

We have carried out juice heating calculations for two types of heat exchangers (shell-and-tube and plate-and-gasket), and considered heating with both bled vapour and condensate. The equations for counter-current heat exchangers and the values assumed for heat transfer coefficients and approach temperatures for the various cases are given in Appendix 2. In calculating the necessary heat exchanger areas, we have assumed a 10% heat loss in the juice heaters.

(3) *Evaporator calculations*

First, the evaporator configuration is specified (type of evaporator, number of effects, area of each effect, connection to juice heaters and vacuum pans), as well as the exhaust steam pressure and temperature, the incoming juice temperature and mass flow, the juice Brix entering and leaving the evaporators, and the condenser variables. Then the vapour temperature is input for each effect (alternatively the pressure or the heat transfer coefficient can be specified), and an initial guess is made at the amount of vapour bleeding needed for juice heating and vacuum pans. The heat and mass balance equations (Appendix 3) can then be solved to find the mass flows of steam and juice. After finding the mass flows, the juice heating calculations are repeated, and the whole sequence is iterated until a self-consistent solution is obtained. We have checked these calculations with those of a more sophisticated computer program[13] and obtained generally good agreement, to within about 5%. Low pressure steam losses of 3% are assumed in the process.

(4) *Vacuum pan calculations*

We have based our estimates of steam use in discontinuous vacuum pans on those at Monymusk, assuming a value of 137 kg/tc (Appendix 4). For continuous vacuum pans, we have assumed that the steam consumption is reduced by 25% from its present value at Monymusk to 103 kg/tc. The continuous vacuum pan heating surface areas required are calculated from tables in Hugot[12].

Retrofit case studies

In this section, we present four case studies of steam economy retrofits of a raw sugar factory (modelled on Monymusk factory in Jamaica) with a CEST cogeneration system. In each case, we have calculated the factory steam and mass flows, and the heating surface areas of retrofit equipment (condensate juice heaters, falling film evaporators and continuous vacuum pans). Using the capital costs for process equipment given in Table II, the total cost of each retrofit is estimated.

Table II. Summary of process equipment costs

	Installed cost, $ US
Juice heaters (a)	
Shell-and-tube	$75 - 100/m^2
Plate-and-gasket	$100 - 150/m^2
Evaporators (b)	
Short-tube rising film	$300 - 500/m^2
Falling film	$300 - 500/m^2
Vacuum pans (c)	
Discontinuous	$500/m^2
Continuous	$500/m^2

Sources:
(a) APV Crepaco: Heat transfer handbook"
(b) A. Rosenblad (Rosenblad Evaporators Inc.): private communication
(c) Based on the assumption that vacuum pans cost about as much as evaporators per unit heating area, which was confirmed with industry experts. Where a range is given, we have used the higher value when estimating retrofit costs.

Once the factory steam demand is known, the export electricity production can be found from Figure 3. The extra export electricity with the retrofit is then calculated relative to the base case. Assuming an average grinding rate of 175 tonnes of cane per hour, a 210-day, 23 hour/day season, and an electricity price US $0.06/kWh, the extra electricity revenue (due to decreased process steam demand) and the simple payback time for each retrofit are computed. These results are summarized in Table III and Figures 6 - 9.

(1) *Base case conventional raw sugar factory* (Figure 6)

Our base case is a conventional raw sugar factory modelled on the Monymusk factory in Jamaica. A description of the existing factory equipment and operating conditions[13] was used as input to our sugar factory model, and the mass and heat flows were calculated, as shown in Figure 6. Our estimates of the mass flows matched those of a more sophisticated modelling program (Table I[13]) to within about 5%. The process low pressure steam demand including turbine losses is 405 kg/tc.

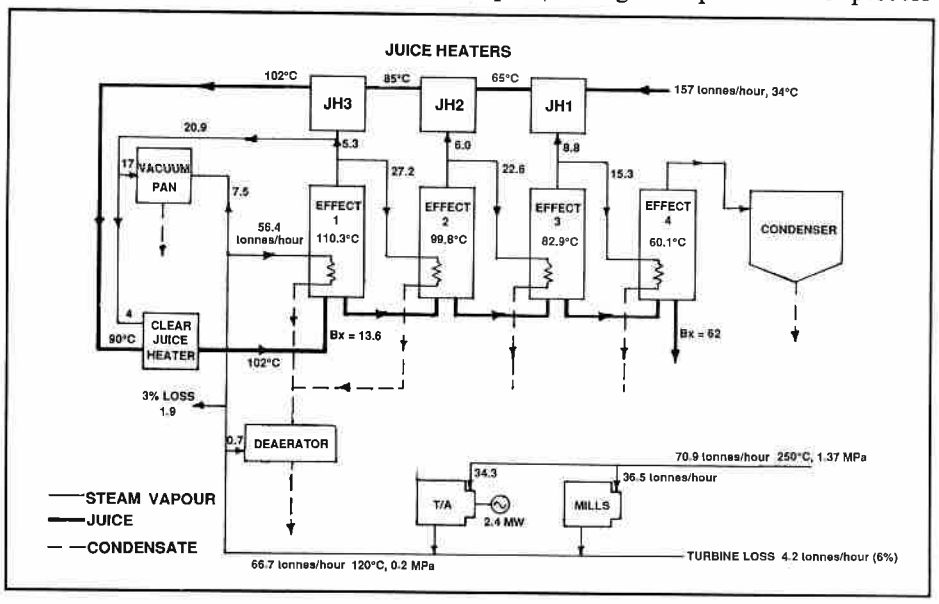

Fig. 6. Conventional factory based on the Monymusk factory in Jamaica (Case 1, Table III)

Table III. Comparison of steam economy retrofits for a 175 tch raw sugar factory crushing 23 hr/day during a 210-days season

Case	1 Present Monymusk with CEST	2 With condensate juice heater	3 Quadruple falling film evaporator	4 Quintuple falling film evaporator
Factory demands				
Medium pressure steam, kg/tc:	405	359	313	258
Mills	209	209	229	229
Turbo-alternators	196	150	84	29
6% loss	–24	–22	–19	–15
Low pressure steam, kg/tc:	381	337	294	242
Evaporator	322	308	279	231
Direct to vacuum pans	43	43	43	0
3% loss	11	10	9	7
Electricity, kWh/tc	12.8	12.8	12.8	12.8
M.P. steam saved, kg/tc	-	46	92	147
Retrofit cost, US$				
Juice heater	-	147,000	144,800	56,700
Falling film evaporator	-	-	2,400,000	2,400,000
Continuous vacuum pans	-	-	-	622,000
Total	-	147,000	2,544,800	3,078,700
Total electricity for export, kWh/tc	94	97.5	101.0	105.2
Extra electricity for export, kWh/tc* (relative to Case 1)	0	3.5	7.0	11.2
Extra electricity revenue, US $/season (relative to Case 1)	0	177,000	354,000	568,000
Simple payback time for retrofit (seasons)	-	0.8	7.1	5.4

These results are based on the model of the sugar factory described in Appendices 1-4.
* Assumes that a CEST cogeneration system is used, that an extra 0.076 kWh of export electricity is generated for each kg of medium pressure steam saved and that electricity is worth US$0.06/kWh.

(2) *Condensate heat recovery for juice heating* (Figure 7).

In this case, we estimated the process steam demand, assuming heat is recovered from the condensate for juice heating. If all the condensate is used for heating, the overall steam demand is reduced from 405 kg/tc to 358 kg/tc. If a plate-and-gasket heat exchanger is used, the heating surface area required is 979 m² and the cost is $ 147,000; for a shell-and-tube type the area is 1957 m², and the cost $196,000. The extra electricity production is 600 kW, the revenue per season is about $177,000 and the payback time is about one season.

If only the impure condensate is used for heating, the medium pressure steam demand is reduced to 389 kg/tc. The heating surface area of a plate-and-gasket juice heater is 238 m², the cost is $37,500, the extra electricity production is 213 kW, the extra revenue per season is $62,000 and the payback time is less than one season.

In these cases, condensate juice heaters can reduce the low pressure steam demand by 4 - 12%.

(3) *Quadruple-effect falling film evaporator with condensate juice heating* (Figure 8)

In this case, a quadruple effect falling film evaporator is installed, and condensate is used for juice heating. The overall medium pressure steam consumption is reduced to 313 kg/tc, a saving of about 23%. The saving occurs largely because the first two effects are run under pressure, so that vapour for

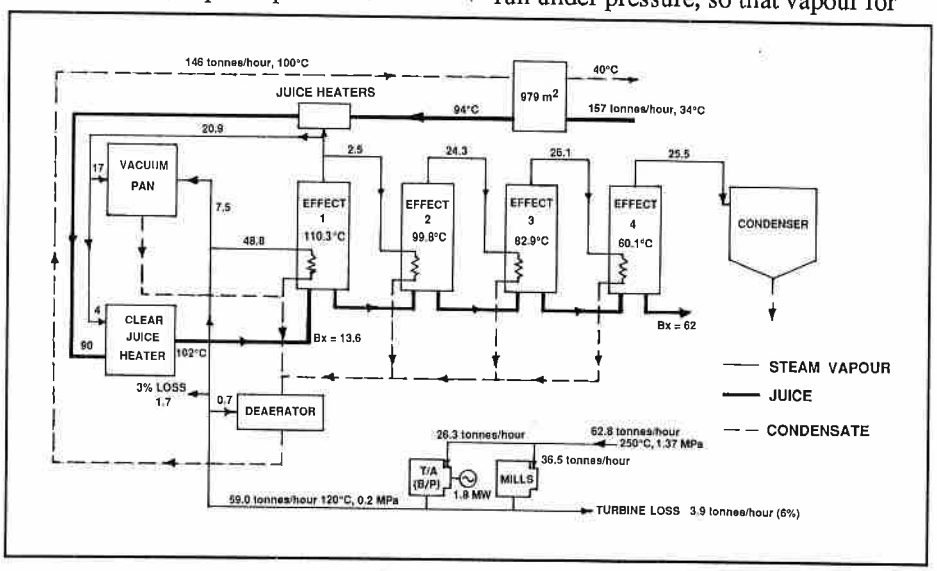

Fig. 7. Conventional factory with condensate heat recovery for juice heating (Case 2, Table III)

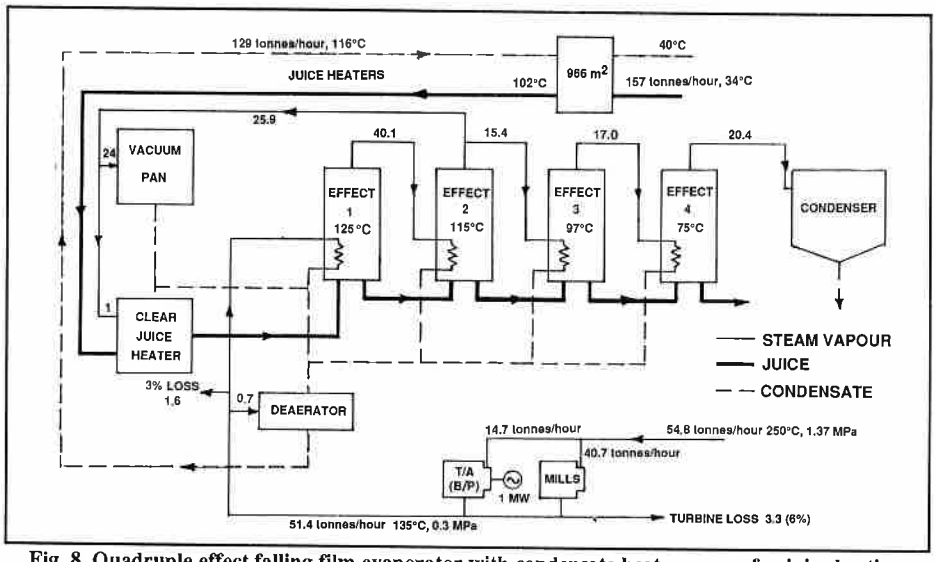

Fig. 8. Quadruple effect falling film evaporator with condensate heat recovery for juice heating (Case 3, Table III)

the vacuum pans is bled from the second effect, rather than using first effect vapour or exhaust steam. In addition, no vapour bleeding for juice heating is required. The area of the evaporator is 4800 m²; that of the juice heater is 970 m². The total cost is about $2.5 million. The extra export electricity production with a CEST system is 1225 kW (an increase of about 10%), the extra revenue is $355,000 per season, and simple payback time is 7.2 years. This case is interesting, because it could perhaps be used with the highly efficient GSTIG cogeneration system, and still meet the factory steam demands.

(4) *Quintuple-effect falling film evaporator with condensate juice heating and continuous vacuum pans* (Figure 9)

For greater steam economy, a quintuple-effect falling film evaporator with condensate juice heaters and continuous vacuum pans could be installed. The total area of the evaporator is 4800 m². The steam required is reduced to 258 kg/tc with this design, a saving of 36%. The total retrofit cost would be about $3.1 million dollars. The extra export electricity would be 1960 kW (an increase of 12% as compared to case 1), the extra revenue would be $574,000 per season, and the simple payback time would be 5.4 years. The GSTIG cogeneration system could also be used with this factory design.

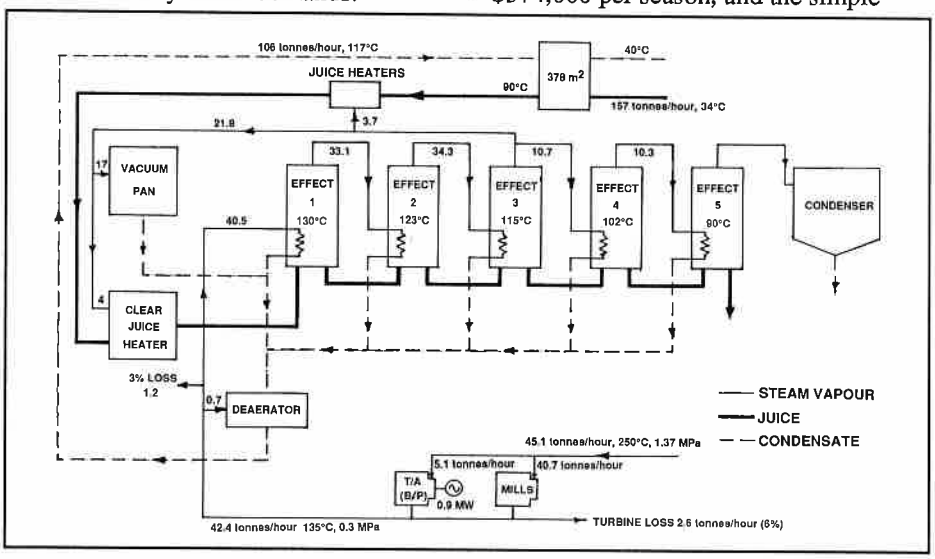

Fig. 9. Quintuple effect falling film evaporator with condensate juice heating and continuous pans (Case 4, Table III)

Conclusions

Using commercially available process equipment it appears to be possible to reduce the overall steam use in a raw sugar factory to about 250 kg/tc. If a high pressure condensing-extraction steam turbine cogeneration system were present, the payback time of the various steam economy retrofits considered would be between one and six seasons for electricity selling at US$0.06/kWh. For the CEST cogeneration system the export electricity production was increased by up to 15% by steam economy. Steam conserving designs also make bagasse gasifier/gas turbine cogeneration systems a future possibility for use in the cane sugar industry. The export electricity from these systems could be about 200 kWh/tc or twice the amount possible with CEST systems today.

Acknowledgements

The research reported here was undertaken with support from the Office of Energy of the US Agency of International Development, Washington, DC, as part of its Jamaica Cane/Energy Project.

The generous help of the engineers at Monymusk, particularly John Blanchard, is much appreciated. The authors would also like to thank Helmut Bourzutschky, Francisco Correa, Jack Keppeler, Charles Kinoshita, Eric Larson, José Roberto Moreira, Axel Rosenblad, Ian Sangster, Earl Smith, Robert Socolow and Robert Williams for useful discussions and comments during this work.

Summary

With the recent trend toward diversification in the cane sugar industry, a growing number of factories are producing electricity for export to the utility grid, in addition to sugar and molasses. In this paper, we discuss energy efficiency improvements as a

way of increasing electricity production in a raw cane sugar factory with a cogeneration system. We have considered two types of advanced bagasse-fired cogeneration systems: (1) high pressure condensing-extraction steam turbine systems of the type used in some factories in Hawaii and Réunion, and (2) steam-injected gas turbines run on gasified bagasse (these systems, which could be commercialized within a few years, could produce about twice as much export electricity as a high pressure condensing-extraction steam turbine, but would require some steam conservation measures in the factory).

We have written a computer program to calculate factory balances for several steam-conserving designs incorporating commercially available process equipment: waste heat recovery heat exchangers which utilize hot condensate for juice heating, falling film evaporators, and continuous vacuum pans. Our results indicate that the process steam use could be reduced to less than 300 kg per tonne of cane milled, boosting the electrical output of the steam turbine cogeneration system by up to 20% and making the highly efficient gas turbine systems a future option for the cane sugar industry.

Economía de vapor y co-generación en las fábricas de azúcar de caña

Con la tendencia reciente de diversificar la industria del azúcar de caña, varias fábricas están produciendo electricidad para exportar a la red de servicios, además de azúcar y melazas. En este trabajo, nosotros discutimos el mejoramiento en la eficiencia energética como una manera de aumentar la producción de electricidad en una fábrica de azúcar crudo de caña con un sistema de co-generación. Hemos considerado dos tipos de sistemas avanzados de co-generación alimentados por bagazo: (1) sistemas de turbinas a vapor de condensación y extracción a alta presión del tipo usado en algunas fábricas en Hawaii y Réunion, y (2) turbinas a gas inyectadas con vapor que funcionan con bagazo gasificado (estos sistemas, que podrían ser comercializados dentro de unos pocos años, podrían producir el doble de la electricidad exportada por la turbina a vapor de condensación y extracción a alta presión, pero requeriría ciertas medidas para la conservación del vapor en la fábrica).

Hemos escrito un programa de computación para calcular los balances de fábricas de varios diseños de conservación de energía incorporando equipo de procesamiento disponibles comercialmente: intercambiadores de calor para recuperación de calor que utilizan condensado caliente para el calentamiento de jugos, evaporadores de película descendente, y tachos de vacío continuos. Nuestros resultados indican que el uso de vapor en el proceso podría ser reducido a menos de 300 kg por tonelada de caña molida, incrementando la producción eléctrica del sistema de cogeneración de turbina a vapor en hasta un 20% y hacer de los sistemas de turbinas a gas altamente eficientes una futura opción para la industria del azúcar de caña.

Economie de vapeur et génération d'énergie avec vente au réseau dans les sucreries de canne

Avec la tendance récente vers une diversification dans l'industrie du sucre de canne, un nombre croissant d'usines produisent, à côté du sucre et des mélasses, du courant électrique pour l'exporter vers le réseau. Dans cest article nous discutons des améliorations pouvant être apportées à l'efficience en matière d'énergie et qui peuvent constituer une voie pour produire davantage de courant dans une sucrerie vendant du courant au réseau. Nous avons considéré deux types de systèmes avec combustion de bagasse: (1) un système mettant en oeuvre un turbine à vapeur sous pression élevée opérant en condensation-extraction (du type utilisé dans quelques usines à Hawaii et en Réunion) et (2) des turbines à gaz avec injection de vapeur opérant sur de la bagasse gazéfiée. Ce dernier système, qui pourra étre commercialisé dans peu d'années, pourra produire presque deux fois plus de courant exportable qu'une turbine à vapeur à haute pression opérant en condensation-soutirage. Son utilisation exigera cependant certaines mesures d'économie de vapeur dans les usines.

Nous avons écrit un programme d'ordinateur qui calcule les bilans des usines pour différents projets pouvant conduire à une économie de vapeur et comprenant des équipements disponibles sur le marché: des échangeurs de chaleur pour récupérer des calories perdues et utilisant du condensat chaud pour réchauffer les jus, des évaporateurs à descendage et des appareils à cuire continus. Nos résultas indiquent que la vapeur utilisée dans le processus pourrait être réduite à moins de 300 kg par tonne de canne travaillé. Ceci rehausserait de plus de 20% la quantité d'électricité de la turbine à vapeur dans un système de cogénération. De ce fait les systèmes de turbine à gaz à haute efficience deviennent une option d'avenir dans l'industrie du sucre de canne.

Appendix 1. Steam consumption in cane mill turbines and factory turbo-alternators

We have based our estimates of cane mill and turbo-alternator steam consumption on results of a sugar factory modelling program by Blanchard applied to the small steam turbines at Monymusk[13]. For various conditions this program gave the resultswhich appear in Table A.1.1.

We have compared these numbers with estimates of steam consumption in the cane mills and turbo-alternators derived from Hugot[12]:

$$Q_{gen} = 3600/[(h_{in} - h_{out})\, n \times pm \times pg \times pr]$$

$$Q_{mill} = 3600/[(h_{in} - h_{out})\, n \times pm \times pmg]$$

where:

Q_{gen} = steam consumption in kg

Table A.1.1.

Steam inlet		*Steam outlet*		*Mills*	*Turbo-alternators*
P_{in} (MPa)	T_{in} (°C)	P_{out} (MPa)	T_{out} (°C)	Steam used (kg/tc)	Steam used (kg/kWh)
1.37	250	0.20	120	209	14.0
		0.25	127	233	15.9
1.9	270	0.20	120	177	11.9
2.5	360	0.20	120	129	10.2

steam/kWh electricity out at generator terminals

Q_{mill} = steam consumption of mill in kg steam/kWh mill power

n = average turbine thermodynamic efficiency

= 0.7 - 0.72 (back-pressure of 0.149 - 0.396 MPa)

= 0.65 for mill turbine (two-stage)

h_{in} = enthalpy of steam in (kJ/kg)

h_{out} = enthalpy of steam out (kJ/kg)

pm = mechanical efficiency of turbine = 0.985

pg = efficiency of generator

= 0.94 - 0.985

pr = efficiency of generator gearing

= 0.97 - 0.985

pmg = efficiency of gearing for mill

= 0.85

These formulae do not consider part load performance, which can affect the steam consumption significantly.

Steam conditions and quantities, calculated assuming the following values for Monymusk (pm = 0.985, pg = 0.9625, pr = 0.9775, n = 0.70 for back-pressure turbo-alternators; pmg = 0.85, n = 0.65 for mills), are given in Table A.1.2.

Table A.1.2.

Steam inlet			*Steam outlet*			*Turbo-alternator*	*Mills*	
P_{in} (MPa)	T_{in} (°C)	h_{in} (kJ/kg)	P_{out} (MPa)	T_{out} (°C)	h_{out} (kJ/kg)	Q_{gen} (kg/kWh)	Q_{mill} (kg/kWh)	Steam used (kg/tc)
1.37	250	2930	0.20	120	2707	24.9	29.7	208-267
			0.31	135	2727	27.4	32.7	229-294
1.9	270	2953	0.20	120	2707	22.5	26.8	187-241
2.0	316	3060	0.20	120	2707	15.7	18.5	129-167
			0.31	135	2727	16.7	19.6	137-176
2.5	360	3149	0.20	120	2707	11.3	13.3	94-122

The actual power consumption in the mills is difficult to estimate *a priori*. We have calculated a range for the mill steam consumption, assuming that the average mill power consumption lies in the range 7 - 9 kWh/tc. Given the uncertainty in these numbers, we have used the estimate in Table A.1.1 for mill steam consumption where available. For the case where P_{in} = 1.37 MPa, P_{out} = 0.31 MPa, we have assumed that mill steam consumption is 229 kg/tc. The turbo-alternator steam consumption is also taken from the estimates in Table A.1.1.

Appendix 2. Juice heater calculations

Juice heater areas and inlet and outlet temperatures can be estimated if the heat transfer coefficients, approach temperature and heating fluid temperature and pressure are known.

From energy balance for a counter-current heat exchanger:

$$m_{jin} \times C_{pj}(T_{jav}) \times (T_{jout} - T_{jin}) = m_s \times [h(T_{sin}) - h(T_{sout})]$$

where:

m_{jin} = mass flow of juice

C_{pj} = specific heat of juice at a certain temperature and Brix (see Appendix 3 for formula)

T_{jav} = average juice temperature

T_{jout} = outlet juice temperature

T_{jin} = inlet juice temperature

m_s = mass flow of steam (or hot condensate)

T_{sin} = inlet temperature of steam (or hot condensate)

T_{sout} = outlet temperature of steam (or hot condensate)

$h(T_{sin})$ = enthalpy of steam (or hot condensate) at inlet

$h(T_{sout})$ = enthalpy of steam (or hot condensate) at outlet

If the approach is known (the temperature difference between the exit steam and the inlet juice, T_{appro}), then we can solve for T_{sout}

$$T_{sout} = T_{jin} + T_{appro}$$

and for T_{jout}

$$T_{jout} = T_{jin} + m_s \times [h(T_{sout}) - h(T_{sin})]/[m_{jin} \times C_{vpj}(T_{jav})]$$

The heat exchanged is given by:

$$Q = U \times A \times LMTD \times f(LMTD) = m_s \times [h(T_{sout}) - h(T_{sin})]$$

where:

U = heat transfer coefficient

A = heat exchanger area

$$LMTD = [(T_{sin} - T_{jout}) - (T_{sout} - T_{jin})]/\ln[(T_{sin} - T_{jout})/(T_{sout} - T_{jin})]$$

f(LMTD) = heat exchanger correction factor = 0.8 - 0.99

Solving for the heat exchanger area gives:

$$A = m_s \times [h(T_{sout}) - h(T_{sin})]/[U \times LMTD \times f(LMTD)]$$

In our juice heater calculations we have assumed the values of heat transfer coefficients U (Watts/°C/m²)given in Table 2.1.

The range of values reflects the influence of fouling. We have used the lower value of the heat transfer coefficient in figuring heat exchanger areas.

Approach temperatures, T_{appro}(°C), are given in Table 2.2.

Table 2.1.

Type of juice heater	*Source of heat* Vapour or steam	Condensate
Plate-and-gasket heat exchanger	2500-4000 (a)	2000-4000 (a)
Shell-and-tube heat exchanger	600-1300(b)	1000-2000(a)

Table 2.2.

Type of juice heater	*Source of heat* Vapour or steam	Condensate
Plate-and-gasket heat exchanger	6-10 (a)	6-10 (a)
Shell-and-tube heat exchanger	7,15,18,20 (c)	6 - 10 (a)

Sources:

(a) APV Crepaco : "Heat transfer handbook", HTH-586

(b) Hugot[12]

(c) These are approximate approach temperatures corresponding to effects 1, 2, 3, and 4, assumed for the shell-and-tube juice heaters at Monymusk, which utilize vapour bled from the evaporator; they are based on Hugot's values[12] and on factory simulations[13]

Appendix 3. Evaporator calculations

Assuming no heat losses, the equations for mass and heat flow in the effect "i" of a forward feed evaporator with N effects are:

Mass conservation:

Sugar: $m_{jo} \times X_o = m_{ji} \times X_i$, i = 1, N

Water: $m_{ji-1} - m_{ji} = m_{vi} + m_{vbi}$, i = 1,N

Energy balance:

$$m_{vi-1} \times HFG(T_{vi-1}) = (m_{vi} + m_{vbi}) \times HFG(T_{vi}) + m_{ji} \times C_{pj} \times (T_{ji} - T_{ji-1})$$

(Condensing vapour) = (evaporation from juice) + (juice heating)

Heat exchange:

$$Q_i = U_i \times A_i \times (T_{vi-1} - T_{ji}) = m_{vi-1} \times HFG(T_{vi-1})$$

Boiling point rise:*

$$T_{ji} = T_{vi} + BPR$$

$$BPR = 2.5 \times fX_i \times (0.3 + fX_i)\,[1 - 0.54 \times P_{vac}/(190.5 - P_{vac})]/(1.036 - fX_i)$$

where: $P_{vac} = 76 - P_{vi} \times 760$, P_{vi} in MPa,

$fX_i = X_i/100$

Specific heat of juice:*

$$C_{pj}(X_i) = 1.0 - (0.6 - 0.0018 \times T_{ji}) \times X_i/100$$

Barometric condenser:

$$(m_w + m_{vN}) \times HG(T_w + DT_c) = m_w \times HG(T_w) + m_{vN} \times HFG(T_{vN})$$

(condensed water) = (input water) + (condensing vapour)

where:

m_{ji-1} = juice flow into effect "i"

T_{ji-1} = temperature of juice flowing into effect "i"

X_{i-1} = Brix of juice flowing into effect "i"

C_{pj} = specific heat of juice at a certain temperature and Brix

BPR = boiling point rise of juice at a given Brix and temperature

T_{vi} = vapour temperature in effect "i"

P_{vi} = vapour pressure in effect "i"

m_{vi-1} = mass flow of vapour into steam side of effect "i"

m_{vbi} = vapour bled from effect "i" to juice heaters or vacuum pans

U_i = heat transfer coefficient of effect "i"

A_i = heat exchange area of effect "i"

T_w = temperature of water into barometric condenser

m_w = mass flow of water into barometric condenser

DT_c = temperature difference between condenser inlet water and outlet condensate

HFG = enthalpy of vaporization

HG = enthalpy of water

For Monymusk, we have assumed the following values for the heating surface areas[13]:

Effect	Area, m²
1	1998
2	1129
3	844
4	836

* E. Hugot[12]

Appendix 4. Vacuum pan calculations

The total vapour to be evaporated in the vacuum pan is:

$$m_{vtot} = m_{jN} \times (1 - X_N/X_f) = m_{jo} \times (X_o/X_N) \times (1 - X_N/X_f)$$

where:

m_{jN} = mass flow of juice out of last effect of evaporator

X_N = Brix out of last effect = 60-70

X_f = final Brix of massecuite = 94-96

m_{jo} = juice flow into first effect of evaporator

X_o = Brix of juice into first effect of evaporator

Then, assuming that the amount of juice is about equal to the amount of cane crushed, Hugot quotes steam consumption of about

$$m_s = (1.2 - 1.7) \times (X_o/X_N - X_o/X_f)/(1 - V_{Ploss})$$ kg steam/tonne cane

where:

V_{Ploss} = heat loss in vacuum pans = 10 - 20%

Assuming V_{Ploss} = 20%, X_o = 13, X_N = 65 and X_f = 96°Brix, then the steam consumption is about

m_s = 100 - 140 kg/tc,

continued on page146